



MINISTRY OF FISHERIES
Hanoi, Vietnam

MIXED SHRIMP-MANGROVE FARMING PRACTICES

A MANUAL FOR EXTENSION WORKERS

Barry Clough, Vu Anh Tuan, Thieu Lu, Danielle Johnston, Michael Phillips and Pornlerd Chanratchakool

ACIAR - MOFI Project FIS/94/12

"Mixed Shrimp Farming-Mangrove Forestry Models in the Mekong Delta"



AUSTRALIAN INSTITUTE OF MARINE SCIENCE



RESEARCH INSTITUTE FOR AQUACULTURE NO. 2



NETWORK OF AQUACULTURE CENTRES IN ASIA-PACIFIC



UNIVERSITY OF TASMANIA

Preface

This manual has been prepared to assist extension officers to advise farmers on techniques for improving yields and farm income in mixed shrimp farming-mangrove forestry farming systems in the Mekong Delta. It focuses mainly on simple, commonsense techniques that will allow farmers to make step-by-step improvements to production without taking unnecessary risks.

The techniques and recommendations covered in this manual are based on the experience of a 6-year collaborative research and development project between the Governments of Vietnam and Australia. It was supported mainly through the Fisheries Program of the Australian Centre for International Agricultural Research (ACIAR).

Assistance in evaluating and refining this manual was provided by extension officers in the southern provinces of Cần Thơ, Bac Liêu and Cà Mau in Vietnam, and by farmers in shrimp-mangrove farming enterprises in Ngọc Hiển district of Cà Mau Province. The editors gratefully acknowledge the assistance of Nguyễn Việt Hoàng, Lê Công Uẩn (farmers), Tiền Hải Lý (Bac Liêu Extension Center), Cao Phương Nam (Cà Mau Department of Science, Technology and Environment), Trương Hoàng Minh (Cần Thơ University), Nguyễn Thị Phương Lan (SUMA Project), Đặng Công Bửu (Cà Mau Wetland Forest Research Center), Nguyễn Văn Duyên (Cà Mau Department of Fisheries), Đỗ Văn Hoàng (Cà Mau Sub-Institute for Fisheries Research) and Ngô Văn Hải (Cà Mau Sub-Institute for Fisheries Research).

Freehand illustrations were drawn by Lý Cao Tấn, and photographs and computer illustrations were provided by Danielle Johnston, Barry Clough and Vũ Anh Tuấn.

Glossary and Abbreviations

SFFE	Shrimp farming—forestry enterprise
PL	Postlarvae
Con	Animal or individual
WSSV	White spot syndrome virus
DBH	Stem diameter at breast height (usually 1.3 m above ground)
MADI	Mean annual diameter increment for mangrove trees

CONTENTS

Key principles 1

Environment 3

- *Nursery and feeding grounds* 3
- *Protection from erosion* 4
- *Water quality improvement* 4
- *Maintaining the environment with mangroves* 5

Present mangrove-shrimp farming systems 7

Pond design & construction 11

- *General farm design* 11
- *Extensive (settlement) pond* 14
- *Reservoir pond* 16
- *Culture pond* 17

Culture techniques for Penaeus monodon 19

- *Pond preparation* 20
- *Seed selection and stocking* 22
- *Management during growout* 25
- *Harvesting* 34

Culture techniques for wild shrimp 35

- *Pond preparation* 35
- *Stocking and harvesting* 35

Mangrove forestry 39

- *Mangroves* 39
- *Forest management practices* 40
- *Estimating forest biomass and volume from DBH and stand density* 48

References 50

KEY PRINCIPLES

Environment

- Try to maintain a band of mangroves of at least 20 m in width along waterways for nursery and feeding areas, and to protect from erosion.
- Where possible remove dikes from around mangroves to improve tidal hydrology and to allow wild shrimp and fish to use them as nursery and feeding areas.

Pond Improvements

- Deepen to average water depth of 0.8 - 1 m, and maintain water level at this to stabilise changes in water quality.
- Widen one or more outer canals as much as possible in mixed farms.
- Reduce the number of internal dikes as much as possible.
- Reduce leakage.

Wild shrimp culture

- Improve recruitment and harvesting techniques.
- Keep out predators.

Culture of *P. monodon*

- Use an extensive culture pond as a settlement pond to improve water quality.
- Use a reservoir pond between the extensive pond and the culture pond to hold clean, good quality water for water exchange in the culture pond.
- Construct culture pond(s) of greater than 3,000 m^2 and not more than 5,000 m^2 in area.
- Construct the pond well and prepare the culture pond well between crops.
- Select good quality post larvae (PL).
- Choose an optimum stocking rate of 4-6 PL m^{-2}. Do not stock more than 10 PL m^{-2}.
- Feed carefully - do not overfeed.
- Exchange water as needed to maintain good water quality.
- Drain surface water from culture pond during heavy rain.
- Monitor shrimp health, survival and size carefully.
- Consider harvesting as soon as shrimp reach a reasonable economic (< 30-35 con/ kg in size).

Mangrove forestry

- Maintain natural tidal hydrology - remove surrounding dikes where possible to allow natural flooding of mangrove forest.
- Plant at a suitable density of not more than 10,000 ha^{-1}.
- Thin manually before the forest begins to self-thin naturally.
- Consider developing a rotation for mangrove forest where each farm has 3-4 stands of different ages. This will provide a more regular income from mangrove forestry and reduce adverse environmental impacts from clear felling a large block of mangroves.

Diversification

- Build up some high land for growing terrestrial crops to provide additional income.
- Consider culturing other aquatic species in addition to shrimp

Farm Development

Prepare a plan for farm development over a 5 to 10 year period that provides step-by-step improvements in production and income without taking too much risk.

ENVIRONMENT

Key Principles

- Try to maintain a band of mangroves of at least 20 m in width along waterways to provide nursery and feeding areas for wild shrimp and fish, and to protect the shoreline from erosion.
- Where possible remove dikes from around mangroves to improve tidal hydrology and to allow wild shrimp and fish to use them as nursery and feeding areas.

Intertidal mangrove areas are not ideal places to build aquaculture ponds, especially for shrimp culture, because the soil has a high organic content and is often acidic. As a result, it is more difficult to control pond water quality and to maintain good shrimp health management practices. In addition, constructing aquaculture ponds in mangroves leads to the loss of mangroves and the valuable economic and environmental benefits they provide. Therefore, aquaculture in coastal areas has to be carried out in environmentally sensitive ways that maintain or enhance these benefits from mangroves while providing food and income for local people. The environmental and ecological benefits provided by mangroves include:

Nursery and feeding grounds

The biological diversity of aquatic species is usually greater in mangrove-lined waterways than in other coastal habitats. Mangroves have an important role as habitat and nursery areas for a wide range of fish, shrimp, crabs, molluscs and other invertebrate animals. For example, mangroves form an important part of the life cycle of the banana shrimp (*Penaeus merguiensis*). This species spawns mainly in shallow offshore waters, and the juveniles then migrate into mangrove waterways where they live for some time before moving back to shallow offshore waters as they approach reproductive maturity. Mangroves also appear to be important nursery and habitat areas for other penaeid (eg. *P. indicus*) and metapenaeid shrimps.

Commercial fish species like sea bass, grouper, mullet and tilapia also make extensive use of mangrove-lined waterways. These species may not be completely dependent on mangroves, but feed extensively on the wide variety of smaller fish species that are resident in mangrove-lined waterways.

There appear to be two main reasons why mangroves are so important as habitat and nursery areas for aquatic species. Firstly, they are a major source of food for aquatic species, because they produce a lot of organic detritus (decomposing leaves, wood, propagules, as well as soluble organic materials). This material is processed directly

and indirectly by crabs, bacteria, fungi, polychaetes, nematodes and other small bottom-living invertebrates. These (or their larvae in the case of crabs) become the food for carnivorous aquatic species (ie those that feed on other animals) which, in turn, become a food source for large predatory aquatic species like sea bass. This food web is very complex and not fully understood, but it is one of the main reasons for high biological diversity in mangrove-lined waterways and the offshore areas near them. The other main reason why mangroves are important as aquatic nursery areas and habitat is that their roots above and below the ground provide many different kinds of habitats where aquatic animals can live and shelter from predators.

The value of mangroves as habitat and nursery areas for aquatic species depends greatly on how easily they can be used. Mangroves that grow along the edge of waterways and are flooded daily by the tide have a relatively high value as nursery areas and feeding grounds. This is because they are very accessible to shrimp, small fish and other small pelagic (free swimming in the water column) species at most stages of the tidal cycle. However, mangroves that are surrounded mainly by dykes or high land do not provide much benefit as nurseries or feeding grounds for free swimming aquatic animals like fish and shrimp, which cannot reach them easily. This means that it is wise to keep as many mangroves as possible along the edge of waterways in order to provide the best nursery conditions, habitats and feeding grounds for aquatic species. It is not wise to surround mangrove areas with dykes.

Protection from erosion

The extensive underground root system of mangroves stabilizes the soil and significantly reduces erosion. In addition, prop roots, pneumatophores and other above ground root structures can significantly reduce water velocity, which also reduces erosion. However, mangroves cannot always prevent erosion completely.

Water quality improvement

In general, the aerial roots of mangroves (prop roots, pneumatophores, knee roots and buttress roots) reduce the velocity of water flowing through a dense forest. If the water velocity is reduced enough, sediments carried in the water will fall to the bottom and be trapped in the mangrove forest. This also depends on the grain size of the sediment particles in the water. Heavy particles like sand will settle out at quite high water velocities, smaller silt particles will settle out at lower water velocities, while even smaller clay particles will settle out only at quite low water velocities. The waterways of Ca Mau Province carry mainly clays and fine silts, which are trapped only at relatively low water velocities. It appears that mangrove forests in some parts of Ngoc Hien district do reduce water velocities enough to trap these fine particles, but the general pattern over the whole district is not clear.

Maintaining the environment with mangroves

Shrimp culture is already carried out in mangrove areas in many parts of the world, with varying degrees of success. In the southern provinces of Vietnam, it is often carried out together with mangrove silviculture (the culture of trees for timber and other forest products) in shrimp-forestry farming enterprises (SFFEs). In Ngoc Hien district of Ca Mau Province, shrimp ponds are commonly located along the edges of waterways and mangroves are grown inland behind the ponds. This isolates most of the mangrove forests from normal tidal flushing so that they are not available as nursery and feeding areas for wild fish and shrimp. It is probably not practical to change the physical location of existing ponds and forest areas in Ngoc Hien district. However, SFFEs and farmers should be encouraged to grow a band of mangroves of at least 20 m in width along the edge of all waterways where the topography is suitable. This will provide nursery and feeding areas for wild fish, shrimp, and other estuarine species, and help to protect the banks of waterways from erosion. It should be emphasised that mangroves can help reduce erosion, but may not always prevent it completely if water currents or waves are strong.

PRESENT MANGROVE - SHRIMP FARMING SYSTEMS

Mixed shrimp-mangrove farms in the southern provinces of Vietnam usually cover an area of about 5-10 ha. Present policy requires that 70% of the farm area must be used for mangrove silviculture, and the remaining 30% may be used for shrimp culture and other domestic purposes.

Two farming systems are commonly used:

Mixed farming system - in the mixed farming system, mangroves and shrimp are cultured together in the same area surrounded by an outer dike. Within this dike, shrimp are cultured in channels or canals dug within the mangrove forest. On most mixed farms, the outer channel is usually deeper and wider than the inner channels that dissect the mangrove forest. The general layout of a mixed farm is illustrated below.

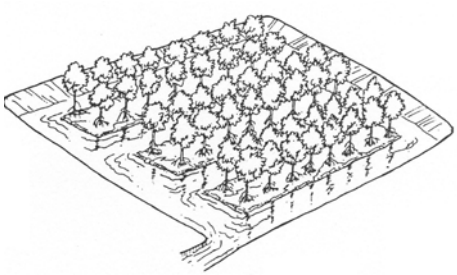



General layout for mixed farms.

Separate farming system - in the separate farming system, mangroves are cultured on one part of the farm, and shrimp are cultured in a separate pond area of the farm without mangroves. Ponds in separate farms consist of an outer dike, within which there are a series of channels and internal dikes, as shown below. The ratio of pond water surface area to internal dike surface area is usually close to 1:1. Many farms are now removing one or more internal dikes to give a larger water surface area.

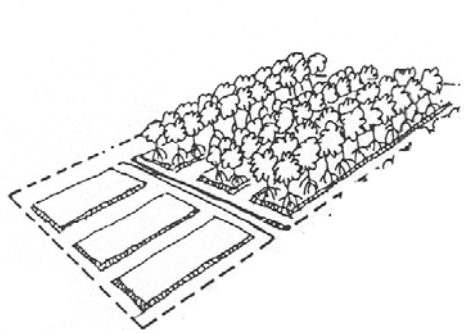



General layout for separate farms.

The average annual profit from mangrove silviculture in both farming systems is estimated to be about US$180 per ha per year (based on 1998 figures) over a full 20 year silvicultural rotation. Most of this income is obtained from the final harvest at 20 years, so mangrove silviculture does not provide a regular monthly or annual income. Consequently, shrimp culture represents the main source of income for most families in both farming systems.

Shrimp culture in mangrove-shrimp farming systems is based mainly on extensive culture of wild shrimp using a 15-day lunar cycle of recruitment and harvest. The short recruitment-harvest cycle is driven mainly by traditional farming practices and the need for farming families to obtain a regular source of income. However, average yields from extensive culture of wild shrimp are less than 250 kg ha^{-1} y^{-1}.

Most farmers also stock black tiger shrimp (*P. monodon*) to supplement income. Stocking rates vary, with many farmers overstocking at rates of up to 10 PL m^{-2}. Survival of *P. monodon* in extensive ponds is usually very low, and most farmers harvest less than 250 kg *P. monodon* per ha per year.

These low yields are due to a number of factors, including:

- Poor water quality.
- Poor pond design and maintenance.
- Poor seed selection.
- Disease.
- There are some additional factors that also contribute significantly to low yields from wild shrimp culture:
- Low and highly variable wild seed stocks in local waterways.
- Relatively low-value Metapenaeid species make up more than 80% of the harvest.
- Inefficient recruitment/harvesting practices for wild shrimp.

Consequently, benefits from current practices of extensive and improved extensive shrimp culture are generally low and variable from one year to the next, while the risk to farmers is very high.

There are several problems with mixed farming systems.

- The extensive canal system for shrimp culture in mixed systems is suitable for wild shrimp culture, but not for improved extensive or semi-intensive culture of black

    - It may not be possible to widen one or more channels to make a pond suitable for semi-intensive culture without cutting mangroves

- When the mangrove forest reaches around 6-8 y of age, the canopy begins to fill in over the top of the channels. Leaves and other debris that fall from the canopy foul the pond bottom. As this debris decomposes, the pond bottom becomes anaerobic, leading to low oxygen concentrations in the pond. In addition, tannins and other similar compounds are released into the water. These may be either toxic to shrimp, or discourage them from feeding on the pond bottom. Tannins and tannin-like materials are also exuded by mangrove roots, and these may leach into the pond.
- The canals for culturing shrimp in mixed farms are usually so long that it is impossible to harvest the pond completely at the end of growout.
- The long canals make it difficult for farmers to re-dig or clean the bottom. Consequently this is not usually done regularly between crops. As a result, the ponds become progressively more shallow due to the settlement of sediment suspended in the water column (in Ngoc Hien district, the level of suspended sediment in the intake water is quite high, with an average of around 0.3 g per litre).
- During heavy rain, the water salinity tends to change rapidly because of runoff from the large surface area of mangroves within the farm. The ratio of mangrove forest to water surface area is about 3:1. This means that almost 3 times as much fresh or low salinity water enters the shrimp culture canals as a result of runoff from mangroves, as enters by direct precipitation in the canals.

tiger shrimp (*Penaeus monodon*). There are a number reasons for this:

- The presence of mangroves inside a pond makes it difficult to manage the pond canals optimally for aquaculture and to manage the forest optimally for wood production, without having to make a compromise in managing one to accommodate the other.
- Mixed farms with their present arrangement of mangroves inside a dike are also not ideal for mangrove silviculture. Surrounding mangroves by a dike changes their hydrology and prevents regular tidal flushing, which usually leads to slower growth and lower timber yields. In addition, the land level of mangroves inside the pond is often more elevated than that of mangroves

Some effects of surrounding mangroves with a dike …….

- The growth rate of mangrove trees may be reduced, leading to lower yields of forest products.
- Mangroves are no longer very accessible to juvenile shrimp, fish and other aquatic species, and so cannot function as effectively as nursery or feeding grounds for wild aquatic species.
- Mangroves no longer function effectively as filters to improve water quality
- The mangrove belt along the edges of waterways is often not wide enough, or dense enough, to be ef-

outside the pond.

There are also some problems with the present design of separate farming systems for improved extensive or semi-intensive culture of black tiger shrimp (*Penaeus monodon*).

- Dikes inside the pond reduce water circulation and mixing, which can reduce water quality. In addition, runoff from the internal dikes during heavy rain can lead to more rapid changes in pH (if the soil in the dikes is acidic) and salinity.
- Most farms take water with high levels of suspended sediments directly from nearby waterways without using settlement pond to reduce suspended sediments.
- High rates of leakage from some ponds lead to unstable water levels.

POND DESIGN & CONSTRUCTION

KEY PRINCIPLES

- Divide the shrimp culture area into three separate parts - one for extensive culture of wild shrimp and as a settlement pond, one for improved extensive and semi-intensive culture of *P. monodon*, and one for a reservoir to top up the *P. monodon* culture pond.
- If possible, enclose the semi-intensive culture pond inside the extensive pond to reduce leakage.
- Dig the semi-intensive pond to an optimum water depth of 0.8 - 1 m, and maintain water level at this to reduce changes in water quality.
- Control leakage
- Widen the outer canals as much as possible in mixed farms
- Reduce the number of internal dikes in the extensive pond as much as possible.

GENERAL FARM DESIGN

As a general principle, for both mixed and separate farming systems, the shrimp culture area should be divided into 3 separate parts, consisting of:

- A large extensive pond area for wild shrimp culture. This pond is also used as a settlement pond to reduce the level of suspended sediments before water is used for improved extensive or semi-intensive culture of *P. monodon*.
- A small culture pond of 3,000—5,000 m^2 in area for improved extensive or semi-intensive culture of *P. monodon*. Wild shrimp should be excluded from this pond to reduce the risk of disease.
- A separate reservoir pond of about the same size as the culture pond, to hold and condition water before it is used in the culture pond.

In this arrangement, water is first taken from the supply canal to the extensive culture pond, then from the extensive culture pond to the reservoir pond, and finally from the reservoir pond to the semi-intensive culture pond. These principles are illustrated in the diagrams on the next two pages.

Concept of ponds and mangrove forest in a separate farming system

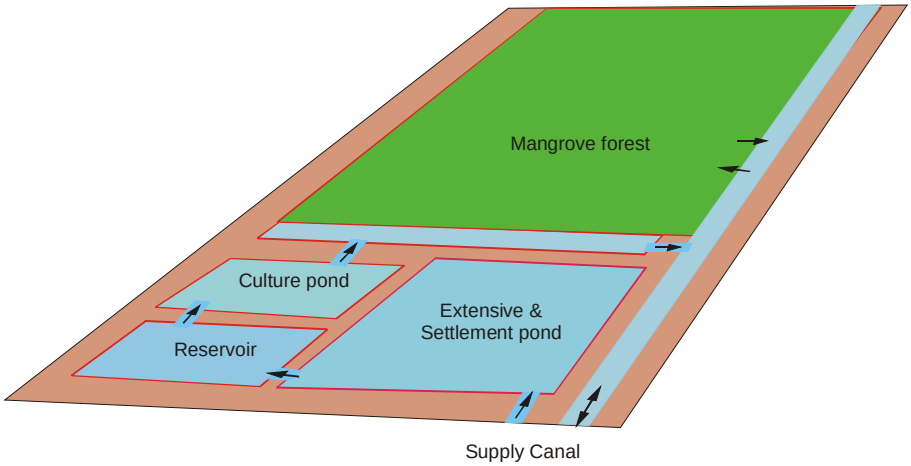

The schematic diagram above illustrates the general concept of an extensive pond, reservoir pond, improved extensive or semi-intensive culture pond, and mangrove forest in a separate farming system. Here the extensive (settlement) pond does NOT contain mangrove forest

Important points to remember are:

- The actual arrangement and location of each of the ponds, and the best position for water gates, will depend on the present shape and layout of the farm.
- Ideally, the reservoir and culture ponds should be enclosed completely within the extensive pond to reduce leakage (this ideal situation is not shown in the concept diagram above in order to keep the diagram simple).
- Where possible mangrove forest should be flushed regularly by the tide. A separate canal to allow for tidal flushing of mangrove forest is shown in the schematic diagram above. This canal may not be necessary if the mangrove forest is flushed from the rear of the farm.
- It is not good for the environment or for other farmers to discharge diseased shrimp, pathogens or polluted water directly into waterways. Therefore, where possible, effluent water should be discharged into a small separate canal, where it can be treated to remove pathogens or improve water quality, if necessary, before it is returned to the waterways.

Concept of ponds and mangrove forest in a mixed farming system

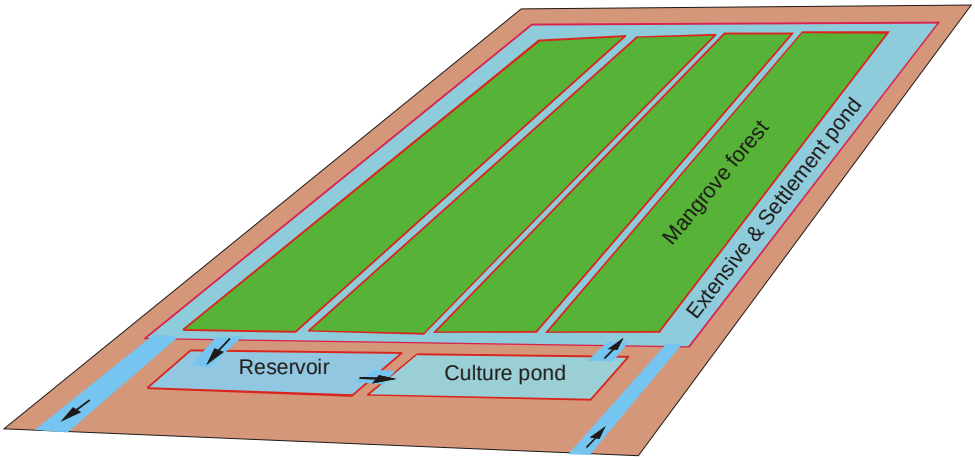

The schematic diagram above illustrates the general concept of an extensive pond, reservoir pond, improved extensive or semi-intensive culture pond, and mangrove forest in a mixed farming system. Here the mangrove forest is enclosed within the extensive (settlement) pond.

Important points to remember are:

- The actual arrangement and location of each of the ponds, and the best position for water gates, will depend on the present shape and layout of the farm.
- The reservoir and culture ponds should be constructed in a wide part of the outer canals (the wider the better). On most mixed farms it is probably not practical to enclose the reservoir and culture ponds completely within the extensive pond
- It is not good for the environment or for other farmers to discharge diseased shrimp, pathogens or polluted water directly into waterways. Therefore, where possible, effluent water should be discharged into a small separate canal, where it can be treated to remove pathogens or improve water quality, if necessary, before it is returned to the waterways. However, this may be more difficult to manage in mixed farming systems than in separate farming systems.

Extensive (Settlement) Pond

A pond of 0.8-1.0 m in depth is better for shrimp culture than a shallower pond of less than 0.6 m in depth. A deep pond provides more stable water quality because the larger volume of water in the pond helps to reduce variations in water temperature, salinity and pH. These parameters change more rapidly when the pond is shallow, causing stress to shrimp and damaging their health. Other factors, such as phytoplankton densities and organic matter content, also affect water quality, but these are not always related directly to the water depth.

The depth of extensive ponds is less critical than the depth of improved extensive or semi-intensive ponds. However, the water level in extensive ponds should not be allowed to fall below 0.6 m, otherwise there is a higher risk that shrimp will die from disease or poor water quality. The optimum depth for the extensive pond will also depend to some extent on the soil characteristics, for example, whether or not deeper soil is potentially acidic, whether or not the soil is sandy (not usually the case in Ca Mau Province), and whether or not the soil is highly organic (soils with a very high organic matter content tend to be leaky).

While it is desirable to deepen the inner canals of extensive ponds in mixed farms to at least 0.6 m, this may not be practical for many landholders. In this case it is helpful to widen the outer canals as much as possible (> 6 m) and deepen them to give an optimum water depth of 0.8m-1.0m. Again, it is necessary to consider the soil characteristics before choosing a suitable depth for the outer canals.

The water level in a shrimp pond depends mainly on its depth and the rate of leakage. The water level over a lunar tidal cycle is also influenced by the tidal range when the pond is filled by gravity (i.e. water is not pumped), as is usually the case in Ca Mau Province. Therefore, it is also important to consider the tidal range over the full lunar cycle when deciding how deep to dig the pond bottom.

All ponds lose some water through leakage. However, leakage through the outer dike around extensive ponds is a major problem in Ca Mau Province. High rates of leakage make it very difficult to manage the water level in extensive ponds, especially during neap tides.

High rates of leakage can be caused by a number of factors:

- Narrow or poorly constructed outer dikes. Outer dikes that surround the pond should be at least 4-6m wide, and the wider the better. Make sure that the dike is compacted well.
- Leakage of water around the water gate seems to be a common problem for both cement and wooden gates. However, water gates made from wood are more prone to leakage than those made from cement. Most farmers deal with this problem by relocating the water gate to another section of the outer dike when the leakage rate becomes too high, commonly at intervals of 3-6 years. The area around the water

gate is usually the narrowest part of the outer dike and is therefore more prone to leakage through cracks in the soil and crab burrows.

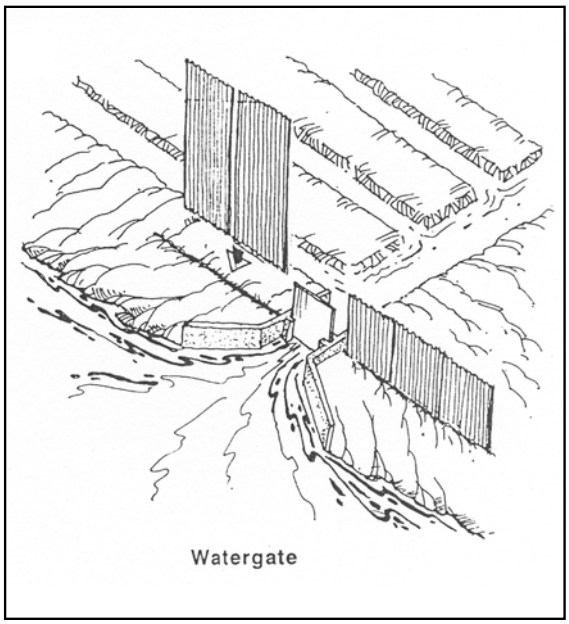

While it is usually possible to move the water gate to a new position, this requires a substantial labour input. It may be possible to reduce, or even eliminate, the need to move water gates by the installation of thick plastic sheet or corrugated fibro-cement roofing material in the dyke for a distance of about 4 m on either side of the water gate, as shown in the diagram above. This may provide an additional barrier to help stop leakage around the water gate. If corrugated fibro-cement roofing material is used, make sure that each sheet overlaps the next by one corrugation. This method for reducing leakage around the water gate has not been trialled and may not be cost-effective, but it is worth consideration.

Most farmers now use cement water gates between the pond and the supply waterway. Older water gates made from wood are not recommended, because leakage is difficult to control. It is important to make sure that the boards fit firmly into the cement casting, and that the boards fit together tightly without gaps. A sheet of strong plastic or rubber fitted on the inside of the boards may help reduce leakage through the water gate.

Where possible, use two water gates for wild shrimp culture in the extensive pond, one water gate for recruitment of wild seed and topping up the pond, and a second water gate for harvesting and draining water out of the pond. This will reduce losses of recently recruited wild seed during harvesting. Experience has shown that up to 60% of the wild seed recruitment on the rising tide may be lost during harvest on the subsequent falling tide if the same water gate is used for seed recruitment and harvesting.

In general, dikes or levees inside a shrimp pond are undesirable because they contribute to a number of problems, including:

- Less pond water surface area relative to the total pond size.
- Poor water circulation and mixing.
- More rapid changes in pond salinity and pH during heavy rain, due to runoff from internal levees. This is particularly a problem in mixed farming systems where mangroves are grown inside the extensive shrimp culture area. In this case the ratio

of mangrove to water surface area is about 3:1, resulting in a change in salinity that is about three times greater than in a separate extensive pond with the same water surface area and no internal levees.

Therefore, as a general principle, it is desirable to remove some or all of the dikes, levees or other elevated areas from inside the extensive pond in separate farming systems to reduce fluctuations in water quality. In practice, it is not possible to do this in the mixed farming system.

RESERVOIR POND

The main purpose of a reservoir pond is to provide a supply of good quality, pathogen-free water for topping up or exchanging water in the culture pond. Settlement of suspended sediment in the extensive pond mainly improves water clarity. If necessary, water in the reservoir pond can be treated with lime or other chemicals to improve water quality or remove pathogens and predators. Shrimp or other crustaceans should not be cultured in the reservoir pond as these may introduce disease to the culture pond. However, it may be possible to culture fish like Tilapia and mullet in the reservoir pond.

As with many decisions in shrimp farming, the question of the relative size of the reservoir and culture ponds is a matter for compromise. Ideally, the reservoir pond should have about the same water surface area as the culture pond. It should not be less than half the size of the culture pond, otherwise it may not hold enough water to allow water exchange in the culture pond when needed.

The shape of the reservoir pond is not critical. It can be of almost any shape that fits within the overall farm design. Similarly, the depth of the reservoir pond is not particularly critical, although it is recommended that the depth be greater than 0.6 m, and preferably 0.8-1.0 m, in order to reduce fluctuations in water quality, particularly during periods of heavy rain and low temperatures.

Only a simple water gate made from plastic pipe with a plug at one end is needed between the extensive pond and the reservoir pond . However, this pipe must be screened with a net to prevent predators and wild shrimp from entering the reservoir pond when it is filled or topped up from the extensive pond. A similar water gate can be used between the reservoir pond and the culture pond.

Benefits of a reservoir pond

- If managed well, it provides a reservoir of good quality water for topping up or exchanging water in the culture pond.
- Water in the reservoir pond can be treated with chlorine, formalin or other disinfectants to remove pathogens and predators.
- It assists in the management of disease, because it isolates the culture pond from the extensive pond and the waterways, which contain predators and wild aquatic species that are potential vectors (carriers) of disease.

CULTURE POND

Ponds of 1 ha or more in size are sometimes used for semi-intensive and intensive culture of *P. monodon* in Thailand, Taiwan, Australia and Central America. However, such large ponds are not recommended for semi-intensive culture in the lower Mekong Delta. There are several reasons for this:

- Large, well-designed ponds are expensive to build and are not economic with relatively low stocking densities
- Stocking a large pond involves a high cost for seed, feed and other inputs. Even for those farmers who may be able invest in a large pond, the high capital and operational cost exposes them to a very high risk of financial ruin from the failure of single crop.

In general, it is suggested that ponds for the *P. monodon* culture in the lower Mekong Delta should have a water surface area of between 3,000 m^2 and 5,000 m^2. However, smaller ponds might still be a viable option for some farmers who choose to dig the pond manually.

Culture ponds should be constructed very carefully. Preferably, they should have a length:width ratio of not more than 3:1. However, in some cases, particularly on mixed farms, farmers may not be able to widen canals enough to meet this specification.

The bottom of the culture pond should be gently sloped as shown in the diagram below, but otherwise should be as uniform as possible in depth and shape, in order to ensure that water quality is similar over the whole pond. The top of the dike around the culture pond should also slope away from the pond so that rainwater runoff from the

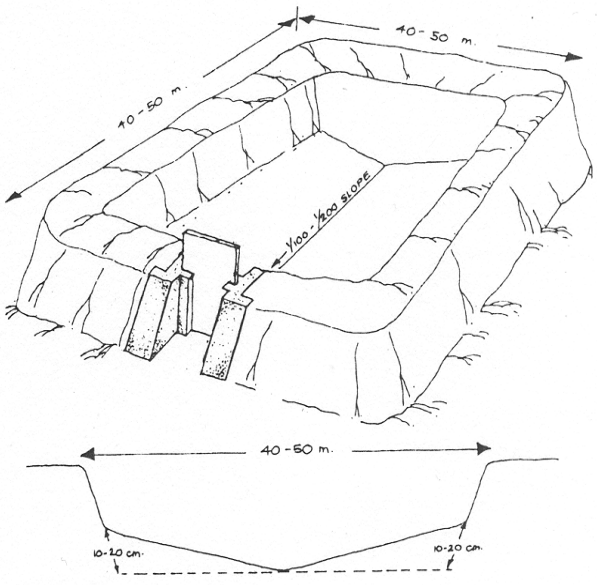

Suggested Pond Specifications

Shape:	Length:width ratio <= 3:1)
Area:	3,000- 5,000m^2
Depth:	0.8-1m average water depth
Bottom:	Slope the bottom towards the centre of the pond (a slope of 20-30cm is sufficient); also slope the bottom from the rear of the pond to the water gate (a 20cm slope in 40-50m is sufficient).
Dyke:	Slope the top of the dyke away from the culture pond

dike ends up in the settlement pond instead of the culture pond.

Where possible, both the reservoir and culture ponds should be enclosed within the extensive pond to reduce leakage from the culture pond, since the water levels in the extensive pond will provide a buffer between the supply canal and both the reservoir and culture ponds.

CULTURE TECHNIQUES FOR *P. MONODON*

Key principles

Pond design & construction

- Use a sedimentation pond , a reservoir pond, and a separate culture pond.
- Use the extensive culture pond as a settlement pond.
- Use a reservoir pond to condition water before it is used in the culture pond. Avoid filling or topping up the culture pond directly from the waterway.
- Construct the culture pond carefully. Ensure that the water depth in the culture pond is maintained at a depth of 0.8-1m to stabilise water quality.
- Reduce the number of internal dikes in the pond as much as possible.
- Ensure that the outer dikes around both the culture and sedimentation ponds is high enough, wide enough and strong enough to avoid flooding on very high tides and to prevent leakage.

Pond preparation

- Clean the pond bottom carefully before every crop.
- Use NPK fertilizer to promote phytoplankton growth.
- Allow enough time for the pond to stabilise between each step in preparation, and before stocking. Do not be tempted to rush pond preparation. Remember that further pond preparation is impossible after stocking.

Stocking

- Do not culture wild shrimp or other species together with *P. monodon* in the culture pond.
- Select strong, healthy PL.
- Stock at a moderate stocking density (4-6 PL m^{-2}). Do not stock at more than 10 PL m^{-2}.
- Acclimate PL to the pond water.

Feeding

- Feed with formulated feed.
- Calculate the feeding rate, and monitor feed consumption, survival and shrimp size carefully. It is better to underfeed than overfeed. Overfeeding will lead to problems with water quality, and increase the risk of disease.

Continued next page …….

Key principles (continued)

Water management

- Exchange water or top up the culture pond only from the reservoir pond, making sure that wild shrimp and predators are excluded from the culture pond.
- Drain off low salinity surface water during heavy rain.

Harvesting

- Begin harvesting larger shrimp as soon as possible after they reach a good commercial size (<30-35con/kg①, or more than about 30g/con②), using the against water current technique.
- Harvest all shrimp as soon as there are signs of a rapid fall in survival.

① con/kg ≡ animals per kg
② g/con ≡ g per animal

POND PREPARATION

Pond preparation before stocking is one of the most critical steps for successful culture of *P. monodon*. Do not rush pond preparation. A poorly prepared pond will lead to poor water quality later in the culture period. Remember that it is too late to improve the pond condition after stocking has taken place.

- Clean the pond - clean the bottom of the pond remove sludge that has accumulated during the last cropping cycle. Remove the sludge with a pump. Sludge should not be placed on dykes. It is better to place it on an area well away from the pond to build up higher land that can be used growing cash crops.
- Free flush the pond - if possible, free flush the pond for 1 week after cleaning (i.e. leave the water gate open and allow water to flow in and out). This step is only possible if the culture pond has a water gate opening directly to the supply canal.
- Drain the pond and apply lime - drain the water, close the water gate, and apply lime (see opposite page).
- Fill the pond - fill the pond from the reservoir pond, using a net (mesh size of 0.5 mm) at the water gate to keep out fish and other predators.
- Apply piscicides - if necessary, apply rotenone, derris or tea seed cake to kill any predators that may have entered the pond.

- Stabilise pond - let the pond stand for a further 7 - 10 days to allow suspended sediment to settle out and the residual effect of any piscicide used to dissipate.
- Apply fertilizers - apply NPK fertiliser and, if necessary, other water treatments to promote the development of phytoplankton and other natural feed. While the benefits of NPK fertiliser are well known, the value of using other chemicals such as probiotics is not clear. Extension officers should check the benefits of probiotics before advising farmers to use them.

Lime

There are four main types of lime: agricultural lime ($CaCO_3$), dolomite ($CaMg[CO_3]_2$), hydrated lime ($Ca[OH]_2$) and quick lime (CaO).

Agricultural lime and dolomite both provide good buffering capacity and are particularly suitable for maintaining the alkalinity and pH of pond water during the culture period.
Hydrated lime and quick lime are both highly reactive and give a rapid change in pH. In general, hydrated lime and quick lime should not be used to improve the alkalinity and pH of pond water, but they can be used as a disinfectant.

Testing Lime ….

- Make a 10% solution in distilled water
- Different types of lime will have a pH approximately as shown below

Type of lime	**pH of a 10% solution**
Agricultural lime ($CaCO_3$)	~ 9
Dolomite ($CaMg[CO_3]_2$)	~ 9 - 10
Hydrated lime ($Ca[OH]_2$)	~ 11
Quick lime (CaO)	~ 12

Lime Application Rates

Soil pH	**Quantity of dolomite or agricultural lime (kg/ cong)***	**Quantity of calcium oxide (kg/ cong)***
6 - 7	100 - 200	50 - 100
5 - 6	200 - 300	100 - 150
Less than 5	300 - 500	150 - 250

* 1 cong = 1,000 m^2



Net to filter out predators when filling the pond.

SEED SELECTION AND STOCKING

Stocking Cycles

In Ca Mau Province, it is common to stock two crops, a dry season crop and a wet season crop, each with a duration of 4 - 5 months depending on the weather conditions and the growth rate of the shrimp. The yield from the dry season crop, when weather conditions and water quality are more suitable for shrimp survival and growth, is expected to be higher than the yield from the wet season crop. In the wet season, heavy rain can cause quite rapid changes in water quality, especially salinity and pH, which weaken shrimp, adversely affect their feeding, and reduce the survival rate. At this time they are also more likely to be affected by disease.

Choosing the best stocking cycle and the right time to stock is not easy, because it is difficult to accurately predict future weather conditions. The stocking cycle should give priority to the dry season crop, because this crop can be expected to have higher and more consistent yields than the wet season crop. Try to avoid stocking shrimp when water quality is expected to change rapidly for the first month after stocking. In practice, the dry season crop should be stocked from late January to late February after the last of the heavy wet season rains and cooler weather. (See rainfall diagram ➔)

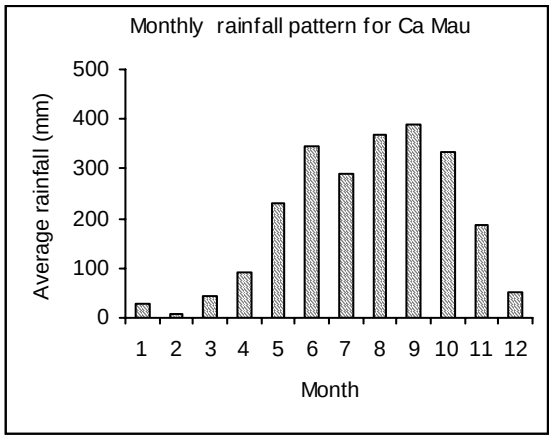

Many farmers re-stock post larvae at 1 or 2 month intervals, giving a more or less continuous cropping cycle. While farmers appear to have had some success from re-stocking at regular intervals, this practice has some disadvantages:

- There is a high risk of cannibalism of new post larvae by more mature animals.
- It is very difficult to calculate the correct feeding rate when the pond contains shrimp with a wide range of ages and sizes. It is also difficult to assess the survival rate for each batch of post larvae, because the pond is not completely harvested after each batch reaches a harvestable size. This makes it much more difficult for farmers to compare management practices from one cropping to cycle to the next. Sound management decisions by farmers depend on how well they understand what is happening in their ponds and reliable information on survival, yields and management actions from past crops.

Seed selection

Selection of good quality, pathogen-free PL is critical for high survival. If the PL are weak or infected with pathogens, then the survival rate will be low.

Generally, PL should be purchased directly from a reputable hatchery with a known record for producing pathogen-free PL. Only large (at least 13 mm in length and of uniform size), strong PL of about PL_{15} (when the rostrum has 4-6 spines) should be stocked. PL can be checked by examining a sample in a small bowl. Healthy PL swim strongly against a water current with straight (not curved) bodies, respond rapidly to tapping on the side of the bowl, and stay near the sides of the bowl when there is no water current. With a magnifying glass, also check the rostrum and appendages for signs of damage, deformities and discolouration (usually black). These are signs of poor health. Damaged appendages are also usually a sign of cannibalism, which often results from inadequate feeding and/or poor hatchery management. Where possible, PL should be given a stress test to eliminate weak PL and ensure that only strong PL are stocked.

The most effective stress test is to put the PL into a solution of 200 ppm formalin (formaldehyde) for 30 min without aeration **(**Nguyen Van Hao et al, 2000**)**. PL density in the solution should not be more than 100 PL/Litre. The quality of formalin available commercially is highly variable, so make sure that formalin of a certified concentration from a reputable supplier is used, otherwise the stress test is useless. This stress test should be carried out at the hatchery before purchasing the PL.



Strong, healthy post larvae (PL_{15}) swimming against a water current.

Some characteristics of good post larvae

- Length > 13 mm
- Uniform size (<5% of PL undersized)
- Swim with straight bodies
- Swim strongly against a water current
- Respond rapidly when you tap the side of the container
- Stay at the sides of the container when the water is still

Characteristics to avoid

- PL that are swept to and remain near the center of the container
- PL whose rostrum and appendages are damaged, deformed, swollen or black in colour

Tips on the Formalin stress test

- Buy good quality formalin from a reputable supplier.
- Immerse PL in a solution of 200 ppm formalin for 30 min without aeration.
- Make sure that the PL density in the formalin solution is less than 100 PL/Litre.
- Separate the weak or dead PL and discard them.
- If the stress test is carried out at the hatchery, transfer the surviving PL to a clean tank with clean water and allow recover for 1-2 days before transportation.

Transport

- PL should be transported to the farm as quickly as possible.
- Shade the bags to avoid exposure to direct sunlight.
- Bags containing PL should not be overfilled with water (not more than a quarter full) and not overfilled with PL (1000-2000 PL/L for PL_{15} and 500-1000 PL/L for PL_{20}).

Stocking & Acclimation

- Stocking density - Stock at a moderate stocking rate of 4 - 7 PL m^{-2}. Do not stock at more than 10 PL m^{-2} in Ngoc Hien district. Stocking at more than 10 PL m^{-2} will increase the risk of disease and the cost of PL without benefit. Widespread over-stocking is also a major factor contributing to shortage of PL supplies from hatcheries, poor PL quality and high PL prices.
- Stocking time - it is best to stock in the late afternoon and evening to avoid exposing the PL to strong sunlight and high temperatures. Do not stock from mid-morning to mid-afternoon as this will significantly increase the risk of mortality from stress.
- Acclimation - acclimate the PL to the temperature and salinity of the pond water before releasing them into the pond. Ideally, the PL should be acclimated to the pond water salinity for 3 days prior to transportation to the farm. If this is not done at the hatchery then the PL must be acclimated to the pond water at the farm before release into the culture pond. To acclimate PL on the farm, empty the bags into large clean tubs or bins and slowly add pond water at the rate of about 10-15% of the tub volume every 15-20 minutes until pond salinity and pH are reached. The tubs or bins should be aerated.

MANAGEMENT DURING GROWOUT

Monitoring pond condition and shrimp health



Acclimation of post larvae to pond water

Farmers who grow rice, vegetables, fruit or other agricultural crops check their crops regularly for signs of pests or disease, and monitor the progress of their crops in order to decide when to harvest and how good the harvest will be. Shrimp farming is no different. Farmers need to know the survival rate and size of the shrimp in their pond at different stages of the crop, in order to make sensible and informed management decisions on when to harvest, and how to respond to changes in water quality, disease outbreaks, or other health problems.

The survival, size and general health of shrimp is very important if shrimp are being fed during the whole growout phase, because the rate of feeding depends on stocking rate and shrimp size. Without some information on stocking density and size, it is not possible to estimate how much to feed. Overfeeding is particularly dangerous, because uneaten feed on the pond bottom usually leads to a very rapid deterioration in pond water quality, which, in turn, harms shrimp health.

Monitoring during the first 25 days

It is relatively easy to measure size and survival up to 25 days after stocking by using a survival net. A survival net is simply a small enclosure in which the number of PL can be counted and their average size estimated. Survival nets are constructed as shown in the diagram to the right. The sides of survival nets should be about 1 m high, and the survival nets should be set up so that the bottom of the net is about 15-20 cm above bottom of the nursery area, and the sides extend above the water surface by 15-20 cm.

The mesh size of the survival net must be small enough to contain PL_{15} (0.5 mm mesh size). It is recommended that the survival net be 1-2 cubic metres in size.

- Release 150 PL into the survival net when the pond is stocked. After 25 days, lift the survival net, count the number of PL inside and estimate their average length.
- The survival rate(%) = 100 x No. PL counted at 25 days/No. PL originally stocked in the survival net.




Survival nets

Monitoring during the period 25 to 50 days

Shrimp are usually too small to sample effectively with a cast net up to about 50 days after stocking. Feed trays are usually used to monitor shrimp survival and health during this time in high yielding ponds stocked at greater than 20 PL m^{-2} (Chanratchukool et al., 1998). However, experience suggests that feed trays may not be so reliable for estimating survival in ponds that are stocked at the stocking rates recommended in this manual for mixed shrimp-mangrove farming systems in the southern Mekong Delta of Vietnam (less than 10 PL m^{-2}). At low stocking densities, patchiness in the distribution of shrimp within the pond and the relatively small numbers of shrimp attracted to the feed trays may lead to errors in estimating survival. This is particularly critical for estimating the correct feeding rate. However, feed trays should still be used to sample shrimp for monitoring their general health, and for monitoring feed consumption (see section on Feed Management)..

Monitoring after 50 days

Cast nets are usually used to monitor shrimp survival and health after 50 days from stocking. Ponds in shrimp-mangrove farming systems in southern Vietnam are not aerated and have poor water circulation. Consequently, a layer of soft mud and other other particulate materials accumulates over most of the pond bottom, unlike higher yielding ponds with aerators, where the soft mud and waste products tend to be pushed towards the centre of the pond. Excessive use of a cast net in unaerated ponds in shrimp-mangrove farming systems will therefore tend to stir up the soft mud on the pond bottom and may contribute to a deterioration in water quality.

For a pond of less than 5,000 m^2 water surface area, estimate the average survival from 4 casts of a cast net in different parts of the pond.

Monitoring should be carried out every 10 days, or more frequently if desired.



Feed trays

Usually 0.5 m^2 in area .
0.8 m diameter for round feed trays;
0.71 x 0.71 m for square trays;
Sides 7 - 10 cm high.

Feed Management

First 25 days after stocking

The first 25 days after stocking are particularly critical for survival. During this time the PL recover from stress during transportation and adjust to the conditions in the pond. Careful control of water quality is necessary at this stage to ensure good survival and rapid growth.

At this stage in their development, PL mainly feed on plankton and other small particles in the water column. Plankton should be abundant in the water column immediately after stocking if the pond has been well prepared as described earlier in the section on pond preparation. However, it is important to continue to stimulate phytoplankton and zooplankton growth during the first 25 days after stocking. Plankton levels can be monitored using a Secchi disc to measure water transparency. Water transparency should be maintained at 30-35 cm. A water transparency of greater than 40 cm indicates a need to stimulate phytoplankton growth.

There are several ways to simulate plankton growth. The simplest way is to apply NPK fertilizer at the rate of 1-2 kg per 1000 m^2 water surface. The fertilizer should be dissolved in pond water before being spread evenly over the pond surface.

However, experience has shown that plankton growth can also be stimulated very effectively using home-made fertlizer/feed formulated as follows. For 1 kg of home-made feed, mix 0.7 kg of boiled fish, 0.2 kg soya and 1 boiled egg yolk. After mixing well, squeeze it through a small mesh net, then mix it with water and spread evenly over the water surface. **Do not use crustaceans or crabs in fertilizer or feed, as these may carry virus diseases like White Spot Syndrome Virus (WSSV).**

In addition to stimulating plankton growth, home made fertilizer/feed also provides a direct source of food for the PL. Home-made fertilizer/feed should be used carefully, as there is a risk that farmers will use more than is necessary with the expectation that survival and growth will be better. On the contrary, applying too much home-made feed is likely to lead to a deterioration in water quality and shrimp health. Based on experience from farm trials, home-made fertilizer/feed can be applied at the rates shown

in the table below (for 10,000 PL stocked at PL_{15}).

Daily feeding rate per 10,000 PL for the first 25 days of stocking when stocked at PL_{15}. These rates are for home-made feed formulated as described on page 27.

Days from stocking	Total feed per 10,000 PL (kg)	Feeding times and percentage total feed per day			
		8:00 am	11:00 am	6:00 pm	9:00 pm
1-5	0.2 kg	30%	20%	20%	30%
6-10	0.3 kg	30%	20%	20%	30%
11-15	0.4 kg	20%	20%	30%	30%
16-25	0.5 kg	20%	20%	30%	30%

It is important to remember that the main objective of using home-made fertilizer/feed is to promote good plankton growth. However, care must be taken to avoid creating a plankton bloom, which would have a very bad effect on water quality. Hence it is important to monitor water transparency with a Secchi Disc, to ensure that it is within the optimum range of 30-35 cm. Daily applications of home-made feed should be reduced when water transparency falls below 30 cm.

If water transparency is less than 25 cm, then daily applications of home-made feed should be stopped immediately, and up to 30% of the pond water should be exchanged as described on Page 32.

Feed management after 25 days from stocking

In well-managed ponds with good water quality, the amount to feed is usually based on the total weight of shrimp in the pond, their growth rate, and whether or not they are actively feeding (Chanratchukool et al., 1998). Feed trays alone are usually used for monitoring survival, size and feed consumption during the period 25—50 days from stocking, while a combination of feed trays (feed consumption) and cast nets (survival and size) are used for monitoring from 50 days onwards. The

Feed Quality

- Use commercial formulated feed
- Make sure that feed is stored in a sealed package.
- Make sure that feed has been stored in a dry, clean area.
- Make sure that the feed is not wet or contaminated with fungus.
- Make sure that feed is marked with a use-by date, and do not use feed that is past its use-by date.

procedures for estimating feed requirements are shown on Pages 30-31.

Feeding rates as a percentage of body weight have been tabulated by Chanratuchukool et al. (1998) for intensive ponds stocked at high densities. However, experience suggests that feeding rates for *P. monodon* in semi-intensive ponds stocked at low densities in shrimp-mangrove farming systems in Ca Mau Province should be lower than those recommended by Chanratchukool et al. (1998). Recommended feeding rates as a percentage of body weight are shown in Table 2 on Page 31.

Estimating feed requirements must be done carefully, because an error in the calculation could lead to overestimation of the amount of feed to be given. **Overfeeding is dangerous.** If shrimp are overfed, the uneaten feed accumulates on the pond bottom, leading to poor water quality. In addition the fouling of the bottom affects feeding and the overall health of shrimp. Feed is the most expensive operational cost of *P. monodon* culture, so overfeeding is also a waste of money.

A Special Case—Estimating feed requirements without information on survival and size.

It would be very risky to use the procedures shown on Pages 30-31 without reliable information on survival, size and feed consumption. As noted earlier (see Page 26), feed trays and cast nets may not be reliable for estimating survival between 25 and 50 days in ponds that are stocked at less than 10 PL m^{-2} in Ca Mau Province. In this case, it is recommended that shrimp be fed at a conservative, fixed daily rate of 0.5 kg of commercial formulated feed per 10,000 PL per day. The number of shrimp in the pond should be based on the survival rate after the first 25 days (from survival nets).

The amount of feed to give daily can be calculated from the following formula:

$$\text{Feed (kg)/day} = R \times (S / 100) \times N / 10000$$

where R = daily feeding rate (0.5 kg per 10,000 PL per day)
S = Survival rate (%) after 25 days (survival net)
N = original stocking density

Feed 3 times per day, 1/3 of the total daily feed at 7 - 8: am, 1/3 at 5 - 6 pm, 1/3 at 8 - 9 pm.

Monitor feed consumption with feed trays as outlined on Pages 30 - 31. Adjust the amount of feed given according to Table 3 on Page 31.

NOTE
Even when feed trays cannot be used for monitoring survival and size, they should still be used for monitoring feed consumption

Estimating feed requirements using feed trays and cast nets

- Use feed trays (see illustration on Page 27) to monitor feed consumption. Use 4 trays in ponds up to 5,000 m^2 in area, and 6 trays in ponds of 5,000 - 10,000 m^2 in area.
- Use the same feed trays to monitor survival and size from 25 to 50 days. Note that feed trays may not give reliable estimates of survival and size in ponds stocked at less than 10 PL m^{-2} in shrimp-mangrove farming systems in southern Vietnam.
- Use a cast net to sample shrimp for survival and size after 50 days from stocking. Sample in at least 3 different parts of the pond.
- Add feed to feed trays and check the trays as shown in Table 1 on Page 31.
- For each feed tray or cast (cast net) - count the number of shrimp and measure their total weight.
- Total the numbers (N) and weights (K) from all feed trays or casts
- Calculate the total number of shrimp in the pond

$$\text{Total number } (C) = S \times \frac{N}{M \times n}$$

- Calculate average shrimp body weight:

$$\text{Average body weight } (X) = \frac{K}{N}$$

- Calculate total shrimp body weight:

$$\text{Total body weight } (A) = C \times X$$

- Calculate the daily feed requirement:

$$\text{Daily feed } (F) = A \times \frac{R}{100}$$

- Feed 1/3 of the daily feed requirement three times a day (8:00 am, 6:00 pm, and 9:00 pm).
- Check feed trays at the appropriate time after feeding (see Table 1 on Page 31). Then adjust feed requirement according to Table 3 on Page 31.

Parameters ...

C = Total number of shrimp in pond (con)

S = Pond water surface area (m^2)

M = Surface area of cast net or feed trays (m^2)

n = Number of feed trays or casts

N = Total number of shrimp caught in n feed trays or n casts

K = Total weight of shrimp in n feed trays or n casts (g)

X = Average body weight (g/con)

A = Total shrimp body weight (g)

R = Feeding rate (% body weight) in Table 2 on Page 31

F = Daily feed requirement (g)

Table 1 — Amount of feed to add to feed trays, and when to check them. (Adapted from Chanratchukool et al., 1998).

Average body weight (g)	Feed in trays (% of total feed)	Time between feeding and checking (h)
2-5	2	2.5
5-10	2.5	2.5
10-20	3.0	2.0
>20	4.0	1.5

Table 2 — Feeding rates as a percentage of body weight

Average body weight (g)	Feed % body weight	
	Lower rate*	Higher rate‡
2-5	3.0	4.5
5-10	2.5	4.0
10-20	2.0	3.0
>20	1.5	2.0

* From farm trials in mixed shrimp-mangrove farming systems in Ca Mau, southern Vietnam.
‡ From Chanratchukool et al. (1998)

Table 3 - Feed tray consumption

Check the feed trays as indicated in Table 1 above. Adjust the amount of feed given as shown below

Feed left on tray (%)	Feed Adjustment
0	Increase by 5%
5	No change
10	Decrease by 5%

Example calculation for feed requirement at 60 days after stocking	
Assume that 10,000 PL were stocked and that survival after 60 days is 60%, with an average body weight of 10 g per con. In this example we use the higher values for feeding rate in Table 2 on Page 31.	
Step 1 - Estimate total amount of feed per day, and per feeding time	
Total number of shrimp	10,000 x 60 / 100 = 6,000
Total weight of shrimp	6000 x 10 = 60,000 g = 60 kg
Feed % body weight (Table 2 on Page 31)	4%
Total feed per day	60 kg x 4 / 100 = 2.4 kg
Feed per feeding time (4 times daily)	2.4 kg / 4 = 600 g per feeding time
Step 2 - Estimate amount of feed per feed tray	
% Feed on feed trays (Table 1 on Page 31)	2.5%
Total feed per feeding time in 4 trays	600g x 2.5 / 100 = 15g
Feed per feeding time per tray (4 trays)	15g / 4 = 3.75 g
Step 3 - Adjust feed according to Table 3 on Page 31	

Pond management during growout

Managing pond and water quality during growout

Effective management of pond conditions, water quality and feeding (where used) is critical to success. Experience from on-farm trials suggests that even in the dry season there is some risk of rapid changes in water quality because of heavy rain. The question is, how best to manage these events? There are some general responses to particular events that can at least reduce adverse impacts on water quality and pond conditions.

Water exchange

Shrimp lose their appetite and stop feeding when they are moulting, unhealthy or stressed. While shrimp moult naturally, loss of appetite for more than a few days is usually the first sign that they are not healthy. This could be due to poor water quality or disease. If suitable monitoring equipment is available, check the main water quality parameters (water colour, water clarity, temperature, salinity, pH, dissolved oxygen) in several parts of the pond, in order to try to identify the problem. Also use a cast net to check shrimp for evidence of disease. Then exchange 20% of the pond volume per day until the shrimp recover their appetite, using clean water from the reservoir pond. If the

water level in the reservoir pond is low, then top it up from the extensive pond, using a net to exclude wild shrimp and predators. Disinfect the water in the reservoir pond before using it in the culture pond if disease is endemic in the supply waterway or extensive pond.

Rain

The top of the dike around a well-designed culture pond should be sloped so that rainwater drains away from the pond. This will reduce the change in both salinity and pH. However, if experience suggests that pond pH decreases rapidly after heavy rain, it may be desirable to apply lime to the dike before heavy rain is expected.

During, or as soon as possible after, heavy rain, the top one or two boards of the sluice gate should be opened to skim off some of the fresh water from the top of the pond. This must be done early to avoid mixing of the fresh, probably more acid, water with the deeper more saline water in the pond, but care needs to be taken not to over-drain the pond.

If pond water quality shows signs of deteriorating over the growout period independently of the rainfall events discussed above, then exchange up to 30% of the pond water per day, using new water from the reservoir pond. Top up the reservoir pond from the extensive pond as needed, making sure that the water gate between the extensive pond and the reservoir pond is screened to exclude wild shrimp and predators from entering the reservoir pond.

Sharp drop in survival or evidence of disease

If survival drops sharply due to disease or other pond problems, then the option of whether or not to harvest prematurely should be considered seriously. Whether or not to harvest prematurely will depend on the nature of the problem, the size of the remaining animals and some assessment of the risk that more will die over the remaining part of the growout period. The first question is whether or not the animals are of marketable size.

If they are **not of marketable size**, then there may be no point to harvesting. Farmers then need to consider the following options:

- Fully drain the pond and harvest, then re-prepare the pond and restock.
- Continue with the present crop and try to manage the situation. In this case, dead and weak shrimp should be removed from around the edge of the pond and destroyed - they should not be dumped in local waterways as this may spread any disease outbreak to other farms nearby. Exchange water as described on Page 32

Harvest immediately if they are of marketable size.

HARVESTING

- Begin harvesting using the "against water current" technique (see Page 36) when the bigger shrimp reach a size of 25-30 g/con.
- Drain the pond completely and harvest all shrimp when they reach a uniform marketable size of 30 g/con. Extending growout beyond the optimum time substantially increases the risk of losses from disease, deteriorating water quality, and/or an episodic event such as a typhoon, unseasonable weather, unusually high tides, or a broken water gate. Drain the pond as quickly as possible on an outgoing spring tide at night. Shrimp are more active at this time and are more likely to move towards the water gate as the pond drains. This also avoids high water temperatures as the water level falls.

CULTURE TECHNIQUES FOR WILD SHRIMP

KEY PRINCIPLES

- Culture wild shrimp only in the extensive (settlement) pond
- Make sure that the extensive pond is well prepared
- Reduce leakage from the pond
- Ensure that the pond is cleaned at least once per year.
- Improve stocking and harvesting techniques to increase stocking density

POND PREPARATION

Soft mud, mangrove leaves and other debris that have accumulated on the bottom of the pond should be cleaned out at least once per year in order to maintain the desired pond depth (0.8 - 1 m) and good water quality.

Whether or not the pond should be limed will depend on the soil conditions on the farm. If necessary, lime should be applied at the beginning of the wet season, using the rates shown on page 21.

STOCKING AND HARVESTING

Farmers usually flush ponds regularly on spring tides (every 12-15 days) for recruitment and harvesting of wild shrimp, and to improve circulation. However, there may be occasions when it is undesirable to flush the ponds. These include outbreaks of disease and when the water quality in the supply canals is poor. In these cases, it is more important to maintain existing water quality and shrimp health in the pond, rather than risk exposure to disease or poor canal water quality. Avoid flushing during neap tides to maximise pond water residence time and allow suspended sediments to settle out.

Based on the normal pattern of wild PL availability, the peak periods for wild shrimp recruitment are April - May and October - November. The usual 15-day lunar cycle for recruitment and harvesting is not efficient due to the loss of recently recruited PL and juveniles during harvests. Therefore it is recommended that two specialised harvesting techniques be adopted to reduce the loss of recruited seed, the “against water current” and “Tom Te” techniques (see Pages 34-35 for a description of these techniques). These also ensure large animals are removed whilst allowing smaller juveniles to remain in ponds to continue growing for up to 4 months. This increases the stocking den-

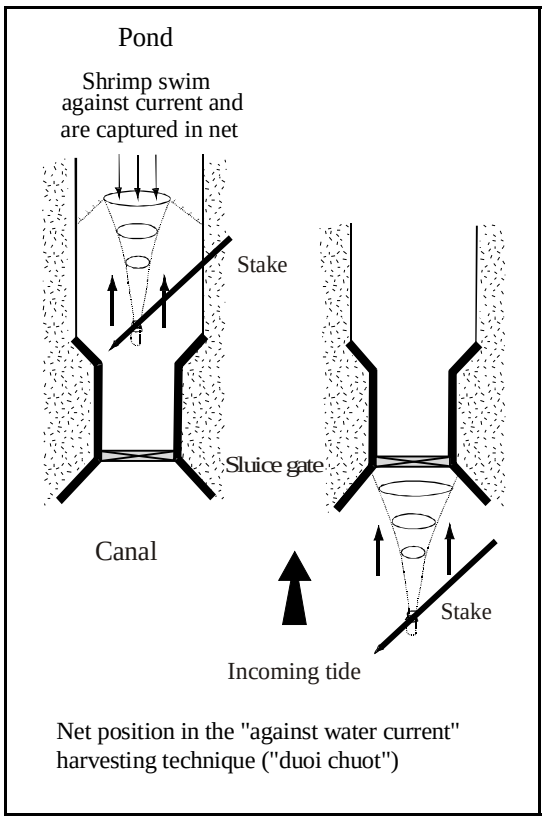

Net position in the "against water current" harvesting technique ("duoi chuot")

sity, and the size and value of shrimp harvested.

The "against water current" technique is based on the behaviour of large shrimp to swim against a strong water current. A conical shaped net (see illustrations on this page) is placed in the canal with its mouth facing into the pond and its cod end staked into the mud to prevent movement.

The front of the net is attached to the sluice gate by a wooden bracket. Alternatively it can be placed in the pond channel directly in front of the sluice gate, its mouth facing away from the gate and into the pond. The net is again staked into the mud and a piece of mesh is placed on either side of the mouth connecting it to the side of the pond wall.

The net is almost as wide as the pond channel and has several iron or plastic rings along its length, the last two with nets attached to prevent the shrimp escaping (see illustrations on previous page). On the in-

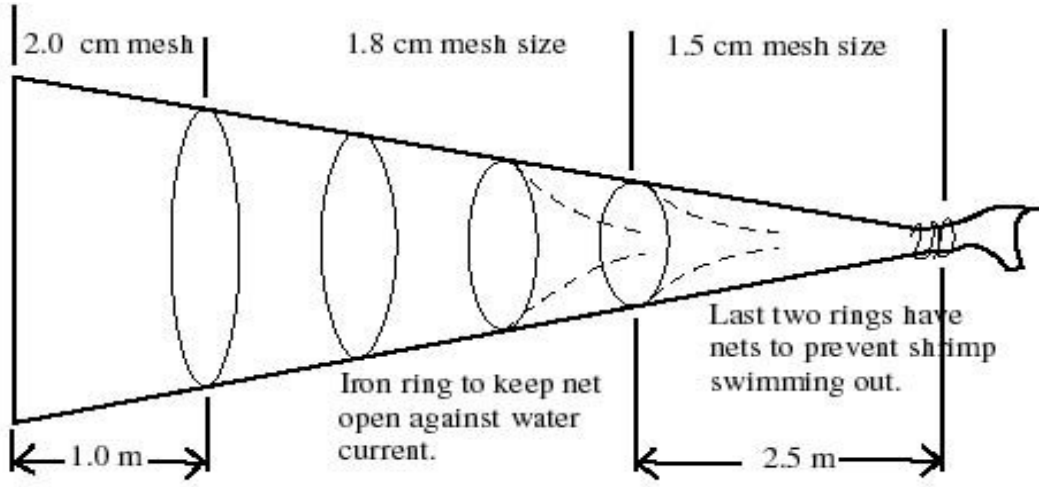

Net design for the "against water current" technique.

coming tide the sluice gate is opened to allow water to flow into the pond. Large shrimp swim against the inflow and in doing so swim into the net. This technique is primarily used to capture large shrimp whilst at the same time reducing PL losses which are considerable using the traditional technique. PL are generally too small to swim against the strong in-current and for this reason the technique should be applied from February to May when PL densities are highest. It is also used strategically to keep small shrimp in the pond until the next cycle, which otherwise would be harvested with the traditional technique.

Another harvesting technique which combines both the traditional and "against water current " techniques is the "Tom Te" technique (literally translated as "shrimp fall down"). This technique involves 2 conical nets placed at the sluice gate both facing into the canal (see diagram on the right). The larger net (that used in the traditional harvesting technique and shortened to 1m by a length of twine) is placed closest to the canal and extends the full width of the sluice gate. The second smaller net (0.8 m long) is directly behind the larger net and is slightly smaller than the gate width with approximately 10 cm to spare on either side of its opening. Both nets are attached to wooden brackets which slot into the sluice gate. On the incoming tide water flows through the nets with the first net capturing any fish or shrimp swimming into the pond from the canal. A strong current is generated on either side of the opening to the smaller net due to the narrow 10 cm gap. Large shrimp already in the pond swim against this current as if to swim out of the pond but instead are captured in the second net. As the current is so strong only very large shrimp are harvested using this technique. Therefore a dual harvest is achieved whereby shrimp and fish from the canal as well as the largest shrimp from the pond are captured. The shrimp captured from the pond using this technique are very clean and fetch high prices at the market.

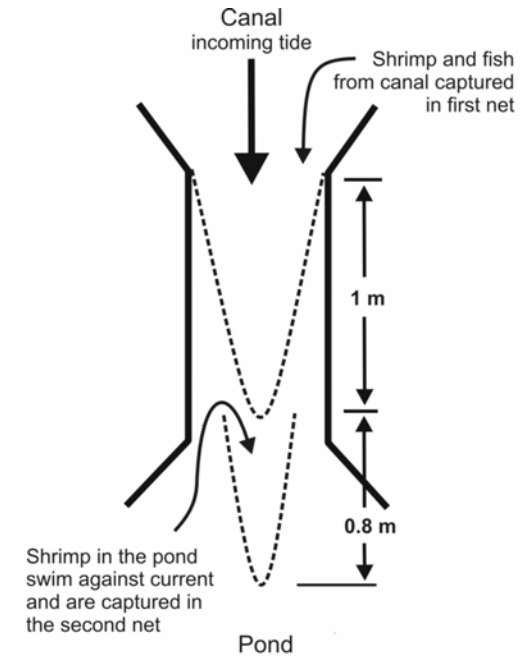

Arrangement of nets in the "Tom Te" technique

MANGROVE FORESTRY

KEY PRINCIPLES

- Maintain natural tidal hydrology - remove surrounding dikes where possible to allow natural flooding of mangrove forest.
- Plant at a suitable density of not more than 10,000 ha^{-1}.
- Thin manually before the forest begins to self-thin naturally.
- Consider developing a rotation for mangrove forest where each farm has 3-4 stands of different ages. This will provide a more regular income from mangrove forestry and reduce adverse environmental impacts from clear felling a large block of mangroves.

MANGROVES

Mangroves (mangrove forest is also called mangal in some books and papers) grow along most of the sheltered tropical coastlines of the world. They also grow along some sub-tropical coastlines. Mangroves are opportunistic colonizers - in other words, they will generally colonize an area and grow naturally if the site conditions are favourable. These favourable conditions include regular flooding by the tide, good drainage at low tide, protection from strong waves, and warm temperatures without frosts. If mangroves do not grow naturally along sections of tropical coasts this usually indicates that the conditions there are not suitable.

It is now known that mangroves provide many important ecological and environmental benefits. These are summarised in the box to the right:

Some benefits of mangroves are to ……

- help protect coasts and river banks from erosion;
- help protect coastal dwellers from storms and storm surges
- help reduce peaks of nutrient and sediment discharges from coastal rivers;
- help trap sediment and build new land;
- produce leaf litter and other detritus that support coastal food chains;
- provide nursery and feeding ground for fauna, including commercially valuable fish, shrimp, crab and bivalve species;
- provide timber and fuelwood for coastal dwellers;
- provide other products like honey and medicinal drugs;
- enhance biodiversity;
- provide aesthetic and recreational values; and
- provide scientific, educational and cultural values.

FOREST MANAGEMENT PRACTICES

Foresters often use the term 'silviculture' when they talk about forest management practices. 'Silviculture' means the culture of trees. The main objectives of forest management are to produce the highest sustainable yield of forest products and/or to provide the most economic benefit. These are not always the same because some of the factors that influence economic benefit are different from those that influence yield. However, generally, a high sustainable yield will also give a good economic benefit.

For mangrove forests, it is not economic to use fertilizers or other chemicals to improve soil conditions. Consequently, the main management options available to forest managers are:

- The choice of a suitable site
- The selection of suitable species
- When and by how much to thin
- Rotation period (i.e. how long the forest will be grown before it is harvested completely).

We will only consider management options for *Rhizophora apiculata* here, because this is the main species of mangrove used for silviculture in South-East Asia. However, the general principles of management described here should also apply to other species.

Site Selection

Site hydrology and climate are the two main factors affecting the survival and growth rate of mangroves. Hydrology includes such things as land level, slope, flooding frequency, freshwater inflow, exposure to waves, and the direction and speed of local water currents. Hydrology is so important because it affects the water content and drainage of the soil. The water content of the soil and soil aeration are the two main soil factors controlling the growth of mangroves.

Sites for the culture of *R. apiculata* should

Suitable site conditions …

- Flooded for 120 - 240 days per year (10 - 20 days per month).
- Silty-clay soil.
- Soil salinity 10 - 30 ppt

Problems with high land (flooded < 10 days per month) …

- Soil may be too dry and too hot for successful establishment and survival of propagules.
- Soil too dry for good growth. Trees suffer water stress and perhaps nutrient unavailability.
- Low yield.

Problems with low land (flooded > 20 days per month) …

- Soil poorly drained and too wet
- Poor availability of oxygen
- Slow growth or even death because of lack of oxygen
- Low yield

be flooded by the tide for 120 to 240 days per year (10 to 20 days per month) for optimal growth. High land that is flooded for less than 10 days per month is generally not suitable because the soil is too dry and may be too saline. Consequently, the trees often suffer from severe water stress (i.e. they cannot get enough water), which reduces their growth. At the other end of the scale, low land that is flooded for more than 20 days per month is also generally not suitable for optimum growth because the soil is too wet and poorly aerated. In this case the roots often suffer from a lack of oxygen which slows down growth, and in extreme cases may cause the trees to die. Other mangroves, like *Avicennia* and *Sonneratia*, can grow well on low land sites because the structure of their root system seems to be more effective in obtaining oxygen than the root system of *Rhizophora* spp.

R. apiculata generally grows well on silt and silty-clay soils in areas with suitable land levels. Soils in Ngoc Hien district are generally heavy clays, with about 50% clay (< 4 microns in size) and 50% fine silt (4 to 18 microns in size). They crack extensively when dry. When the soil is wet, soil salinity usually does not exceed 30 ppt, which is within the range for optimal growth of *R. apiculata*, but the soil salinity increases rapidly as the soil dries out.

Surrounding mangroves by dikes changes their hydrology significantly. This may be a problem for some mixed shrimp-mangrove farms, where the water level in the forest is regulated by the water level in the pond. In this case, the soil surface in the forest may rarely or never be flooded, and the availability of water to mangroves is limited by water flow underground laterally between the pond the mangrove forest. However, it is still not clear whether this has an effect on the growth and yield of mangroves in these farming systems.

It is important to recognise that land levels in Ngoc Hien district are changing. Mangroves that are exposed to regular tidal flooding trap sediment from the water (up to 0.3 g per litre in local waterways), leading to a rise in the land level. The rate of this rise in land level will depend on the relative rates of sediment accumulation and sea level rise. If the rate of sediment accumulation is greater than the rate of sea level rise, then land that is now suitable for mangrove silviculture may become unsuitable in the future. However, the rate of sediment accumulation in mangrove forests that are surrounded by dikes and not flooded regularly by the tide (e.g. in mixed farms) may be less than the rate of sediment accumulation in mangroves that are exposed to regular tidal flooding. Until now there has been no systematic assessment of the rate of change in land level in Ngoc Hien district, so it is difficult to predict which areas will be suitable for mangrove silviculture in the future.

Rotation

The length of the rotation essentially determines the size of the trees and the volume that will be harvested. The gross value of the harvest will depend on the total volume harvested and the market price per m^3. The market price for mangrove timber depends

on whether the timber is being used for poles, charcoal or firewood. In the case of poles, the market price increases with diameter up to about 13 cm in diameter. However, market prices often fluctuate considerably from one year to the next and, given the long timeframe for growing mangrove trees, it is usually not easy to adapt the rotation to suit market prices.

At the time of writing this manual the rotation is set at 20 years, the same period as the normal lease that farmers have on their land. This rotation is suitable for producing poles of up to about 15 cm in diameter and 15-20 m in length, charcoal and fuelwood. A longer rotation would allow the production of larger poles. However, a much longer rotation (> 40 y) may be required to produce saw logs of more than 30 cm in diameter. The table below gives a guide for the size of *Rhizophora apiculata* of different ages in Ngoc Hien district. However, tree size at a particular age will also depend on site conditions and perhaps the thinning strategy.

The average annual gross economic return from mangrove forestry peaks at about 20 years, and then decreases thereafter. In addition, extending the rotation beyond the present 20 year farm lease would be a strong disincentive for farmers to manage mangroves for sustainable timber production. It is therefore recommended that the present rotation of 20 years be retained.

Planting Strategy

Most farms have 3.5 - 7 ha of mangrove forest, which is usually all planted at the same time. Consequently, all the forest on a farm needs to be thinned at the same time, and harvested at the same time. This means that labour costs and income from mangrove forestry are not spread evenly over the rotation, most of the income and profit being obtained from the final harvest. It also means that the whole farm is cleared of mangroves every 20 years, which may not be good for the environment.

It is recommended that farmers gradually move to a planting and harvesting strategy where each farm has stands of 4 to 5 different ages. This would provide the following benefits:

- Farmers would receive a more regular income from mangrove forestry.
- The work load and labour costs of thinning and harvesting are spread more evenly be-

Approximate DBH and height for *R. apiculata* of different ages in Ngoc Hien district.

Age (y)	DBH (cm)	Height (m)
5	3.3	6
10	6.5	10
15	9.8	14
20	13.0	17
25	16.3	20
30	19.5	23
35	22.8	25
40	26.0	27
45	29.3	28
50	32.5	30

tween years.

- Provide greater flexibility in responding to changing market demands for different forest products

Planting Density

In SE Asia, *R. apiculata* is planted at densities ranging from about 7,500 ha^{-1} up to about 20,000 ha^{-1}. The choice of planting density is a compromise between the need to thin at an early age without any economic benefit and higher seed costs at high planting densities (20,000 ha^{-1} or higher), versus the likelihood of a high incidence of multiple stems on the one tree if the planting density if lower (<20,000 ha^{-1}). The advantages and disadvantages of different planting densities are summarised in the table below.

In southern Vietnam, *R. apiculata* trees seem to be more likely to produce multiple stems than at similar latitudes in some other countries, and the incidence of multiple

Advantages and disadvantages of different planting densities

Planting density (N ha^{-1})	Advantages	Disadvantages
20,000	Tall, straight trees Very few trees with multiple stems	The first thinning needs to be carried out at around 5-6 y, when there is a high risk of damage to the remaining trees, and there is no economic benefit from the thinned trees. High seed cost
10,000 to 20,000	Lower seed costs than a planting density of 20,000 ha^{-1}.	The first thinning still needs to be carried out before the thinning products have commercial value.
10,000	Thinning can be delayed until 7-8 y, when the trees are large enough to give an economic benefit. Lower seed costs	Higher risk of multiple stems on the same tree
5,000 to 10,000	The first thinning can be delayed until after 8 y (depending on the density). Higher economic benefits from the first thinning.	Very high risk of multiple stems on the same tree.

stems appears to increase northwards from Ca Mau Cape to Can Gio nearby Ho Chi Minh City. Even when planted at 20,000 ha^{-1}, multiple stems are produced by up to 30% or 40% of the trees in some stands. The reason for the high incidence of multiple stems in southern Vietnam generally, and Ngoc Hien district in particular, is not clear, but it could be linked to genetic changes as a consequence of herbicide spraying in the Mekong Delta prior to 1975. Multiple stems on one tree are undesirable, because they may not yield good, straight poles, and they also make subsequent thinning activities more difficult. On the other hand, there is some evidence that the average annual diameter increment may be greater in trees with multiple stems than in those with a single stem.

It is recommended that the planting density be not less than 10,000 ha^{-1} and not greater than 20,000 ha^{-1}. At 20,000 ha^{-1} there are fewer multiple stemmed trees, but the first thinning should ideally be carried out at about 4-5 years to avoid natural self-thinning (see illustration below). However, in practice there may not be a significant loss in production through natural self-thinning if the first manual thinning is delayed until 7-8 years. The lower planting density of 10,000 ha^{-1} (or 1 m spacing between propagules) will reduce the cost of propagules, allows the first thinning to be delayed until about 7-8 years, when the material thinned from the forest has some commercial value, but carries a greater risk of a high incidence of trees with multiple stems..

There may be considerable natural regeneration after harvesting. If the density of naturally occurring seedlings is below the desired planting density, it may only be necessary to carry out some supplementary planting in order to increase the density.

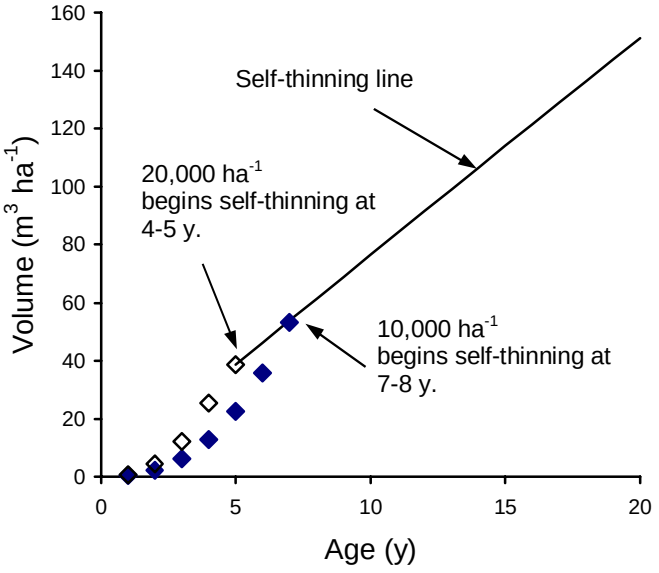

Relationship between stem volume and age for stands planted at 10,000 ha^{-1} and 20,000 ha^{-1}. After stands begin to self-thin, the increase in stand volume with age follows the self-thinning line.

Thinning

Sometime after planting, as seedlings develop into saplings and then trees, they begin to crowd each other and compete for soil resources (e.g. water, nutrients, or space) and canopy resources (e.g. light and space). When competition becomes too great, the some trees die. This last process is called self-thinning, and it occurs in most plant and animal populations when the demand for resources exceeds their availability. In addition, competition may also lead to slower growth of even the dominant trees in a stand before self-thinning begins to occur. For this reason, it is widely believed that manual thinning of *R. apiculata* forests will improve their yield.

Manual thinning has two main objectives:

- to improve yield over the full rotation by avoiding any reduction in growth rate due to competition;
- and to avoid any loss in production by harvesting trees that would otherwise die because of self-thinning.

Estimating when and by how much to thin requires information on

- Stand density (N)
- Average stem diameter (DBH)
- Mean annual diameter increment (MADI) in cm y^{-1}.
- Rotation length.

An extensive series of measurements on stands of different age in Ngoc Hien district show that the stem diameter of *R. apiculata* increases approximately linearly with age up to at least 40 - 50 y, with an average MADI of about 0.6 cm y^{-1} for stands that are flooded for 10-20 days per month. This compares favourably with measurements in the Matang Mangrove Forest of Malaysia, where the DBH of *R. apiculata* has been reported to increase at about 0.64 cm y^{-1} up to the age of about 20 y, then falling to about 0.45 cm y^{-1} from 20 y to 60 y (Watson, 1928). The thinning strategies recommended in this manual are based on a MADI of 0.63 cm y^{-1}. However, the actual MADI for a particular stand will depend on site conditions. More refined thinning strategies for particular stands of *R. apiculata* would require the MADI for that stand to be measured. Refer to the section on Page 48 for methods to measure and calculate stand density, DBH, stand biomass, stand volume, and stand basal area.

Estimating when and by how much to thin is based on the mean annual diameter increment (MADI) and the self-thinning relationship between stand density (N) and DBH shown on Page 46. It is necessary to know the stand density or number of trees per ha.

In Ngoc Hien district, a thinning rate of 20-30% is commonly used. This is too low. With a thinning rate of 20-30% and a mean annual diameter increment greater than 0.6 cm y^{-1}, the forest will reach the stage where it begins to self-thin again in only 2-4

years. In general the thinning rate should be greater than 30%.

In practice, the choice of when and how much to thin is a compromise between maximising the total volume harvested over a full rotation, the cost of thinning, and the value of the timber produced from thinning. In general, the larger the diameter, the higher the market price per cubic metre. A rotation and thinning strategy that optimises the volume may not necessarily optimise the profit from mangrove silviculture. Consequently, it is not always easy to decide on the best thinning strategy, particularly when future market prices for mangrove timber products are uncertain.

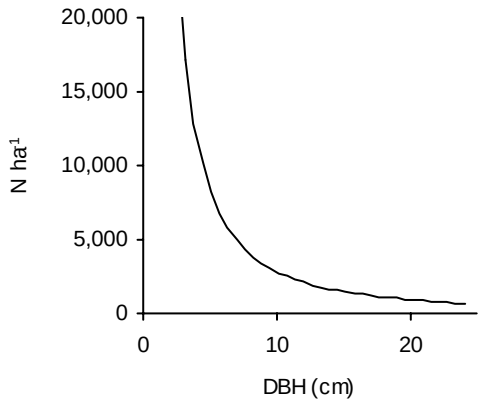

Self-thinning relationship between stand density and DBH for *R. apiculata* in Ngoc Hien district.

With these points in mind, two thinning strategies for optimising the total harvest volume are shown on Page 47.

These two thinning strategies are based on a mean annual diameter increment (MADI) of 0.63 cm y^{-1}. They were calculated using a computer program which is provided with the CD version of this manual.

The total volume harvested can be increased to about 251 m^3 ha^{-1} over a full 20 year rotation with 3 thinnings (at 7, 11 and 15 y), but the additional cost of 3 thinnings may offset the financial benefit from the increase in timber yield.

Rhizophora apiculata plantations should not be thinned after 15-20 y because the trees left after thinning appear to lose their capacity to fill the canopy space made vacant by thinning. For longer rotations the stand should be thinned to the tree density that the stand should have at the age of the final harvest. Approximate stand densities at different ages for longer rotations are shown in the table to the right.

Approximate stem densities for *R. apiculata* stands older than 20 y.

Age (y)	Stem ha^{-1}
30	1,000
40	660
50	460
60	350

In practice it is difficult to thin by a certain percentage, or to thin to a particular stand density. It is much easier to thin to the required spacing between trees, which is usually measured with a stick of the appropriate length.

A Single Thinning

	Thinning 1	Harvest
Age (y)	12	20
DBH (cm)	7.6	12.6
Stem ha^{-1} before thinning/harvesting	4,370	1,960
Stem ha^{-1} after thinning/harvesting	1,960	0
Thin to a spacing of (m)	5.1	0
Volume Harvested (m^3 ha^{-1})	50	151
Total volume harvested over a full rotation (m^3 ha^{-1})		200
Annual yield averaged over the full rotation (m^3 ha^{-1} y^{-1})		10.0

Two Thinnings

	Thinning 1	Thinning 2	Harvest
Age (y)	8	13	20
DBH (cm)	5.0	8.2	12.6
Stem ha^{-1} before thinning/harvesting	8,270	3,850	1,960
Stem ha^{-1} after thinning/harvesting	3,850	1,960	0
Thin to a spacing of (m)	2.6	5.1	0
Volume Harvested (m^3 ha^{-1})	33	48	151
Total volume harvested over a full rotation (m^3 ha^{-1})			232
Annual yield averaged over the full rotation (m^3 ha^{-1} y^{-1})			11.6

ESTIMATING FOREST BIOMASS AND VOLUME FROM DBH AND STAND DENSITY

Stem diameter in trees is usually measured at a height of 1.3 m above the ground. This is called the DBH (diameter at breast height). However, it is usually not possible to measure DBH at a height of 1.3 m in any species of *Rhizophora*, because the stem is not uniform in diameter in the region where the prop roots are formed. It is quite common for prop roots to form anywhere up to 2 m above the ground in *Rhizophora* trees of more than 15 years old, and in much older trees, large prop roots are often present at heights of 4 m or more above ground level. In the case of *Rhizophora* species it is necessary to measure the stem diameter at least 10 cm above the point where the highest woody prop root grows out of the stem. Care must also be taken to make sure that the measurement is made on a section of the stem that is relatively uniform in diameter and without any deformation. In a strict sense, this measurement is not DBH, because it was not measured at a height of 1.3 m above the ground. However, mangrove foresters and ecologists still refer to it as DBH.

Calculating tree weight and volume from DBH

The weight of a tree and it various parts are usually related to its DBH by a power law formula. This can be written as

$Weight = A' \times DBH^B$, a non-linear relationship where A' and B are constants.

This non-linear relationship can also be expressed in linear form by taking logarithms, i.e.,

$\log_{10}(Weight) = A + B \times \log_{10}(DBH)$

It is important to note that the actual numeric value for B is the same in both formulae, but the numeric value for A' in the first formula is different from the value of A in the second formula. To convert numerically between A' and A use

$A' = 10^A$ (10 raised to the power of A)

or

$A = \log_{10}(A')$

These relationships between the weight of the tree and DBH are called allometric relationships. Allometric relationships for the weights of the various parts of *Rhizophora apiculata* and its DBH have already been determined for this species in Ngoc Hien district. These are summarised in the table on Page 49.

To estimate green stem volume, multiply the stem dry weight (biomass) by 0.895.

Stand biomass

For experimental plots, where the DBH of all trees in the plot has been measured, it is

best to total up the individual weights of all the measured trees. However, this is not practical for larger stands of mangrove, which may occupy 1-10 ha. For these, the simplest technique for estimating stand biomass or volume is to obtain an average for the DBH of 50 - 100 trees selected at random within the stand. This average DBH can then be used to calculate the stem dry weight and volume for an "average tree". Then multiply the stem dry weight or volume for an "average tree" by the stand density to obtain an estimate of the stand biomass and volume.

Coefficients for the allometric relationship between dry weight (*W* in kg) and stem diameter (*DBH* in cm). *A*' and *B* are constants in the equation $W = A' \times DBH^B$.

Component	*A'*	*B*
Leaf	0.0357	1.8544
Branch	0.0233	2.5283
Stem	0.1323	2.5559
Stem+Branch	0.1560	2.5538
Root	0.0024	3.1635
Total	0.1764	2.5526

REFERENCES

Chanratchakool, P., Turnbull, J.F., Funge-Smith S.J., MacRae, I.H., and Limsuwan, C. (1998). Health Management in Shrimp Ponds, 3rd Edition. Aquatic Animal Health Research Institute, Department of Fisheries, Kasetsart University Campus, Bangkok, Thailand.

Nguyen Van Hao (2000). Some Technical Issues in Intensive Culture of *P. monodon*. Agricultural Publishing House, Vietnam. 210 pp.

Watson, J.G. (1928). Mangrove Forests of the Malay Peninsula. Malayan Forest Records No. 6. Federated States of Malaysia.